Service schematics

Nokia Lumia 530

RM-1017 / RM-1018

Nokia Lumia 530

Dual SIM

RM-1019 / RM-1020

IMPORTANT

This document is intended for use by authorized Nokia service centers only. Please use the document together with other documents such as the Service Manual and Service Bulletins.

Version differences

This document will cover following releases:

Nokia Lumia 530, RM-1017, Board: 4KT_SR (RoW)
Nokia Lumia 530, RM-1018, Board: 4LT_SA (America)
Nokia Lumia 530 Dual SIM, RM-1019, Board: 4LU_DR (RoW)
Nokia Lumia 530 Dual SIM, RM-1020, Board: 4LV_DB (Brazil)

Version information

While every effort has been made to ensure that the document is accurate, some errors may exist. Please always check for the latest published version for this document.

v1.0 - 25.07.2014
-First approved version.

Contents

1 Front page
2 PM8110, MSM8212, Power, Side keys, USB
3 MSM8212, Memory, Accelerometer, SIM(s), Display, Camera
4 Audio, BT/WLAN/FM
5 RF Transceiver, GPS
6 Component finder Top (RM-1017)
7 Component finder Bottom (RM-1017)
8 Component finder Top (RM-1018)
9 Component finder Bottom (RM-1018)
10 Component finder Top (RM-1019)
11 Component finder Bottom (RM-1019)
12 Component finder Top (RM-1020)
13 Component finder Bottom (RM-1020)

Send feedback

- Recommend Change in KICS
- Rate this page in KICS
- e-mail careacademy@nokia.com

Microsoft Internal Use only | Copyright © 2014 Microsoft, Only for training and service purposes

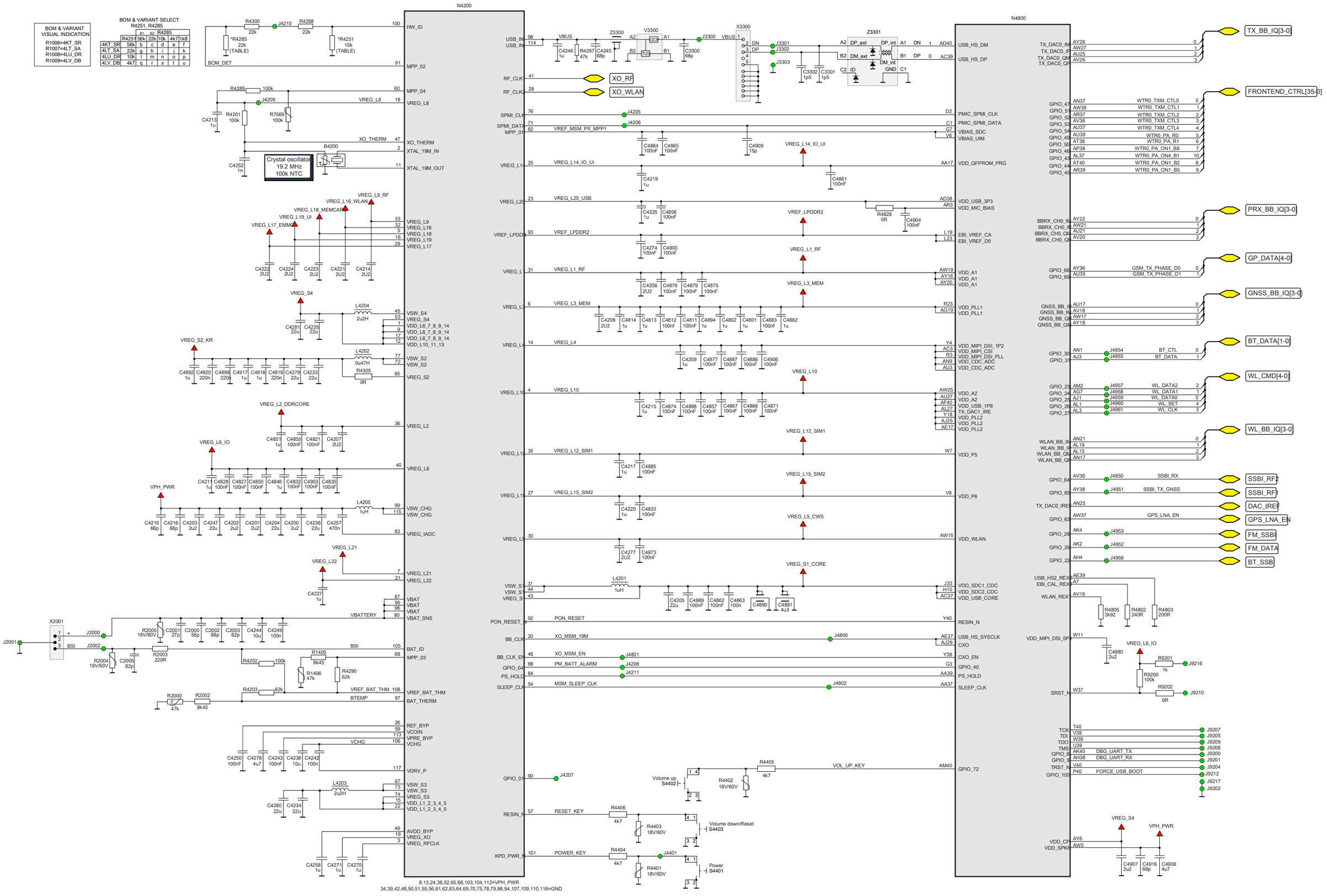

Microsoft Internal Use only | Copyright © 2014 Microsoft, Only for training and service purposes

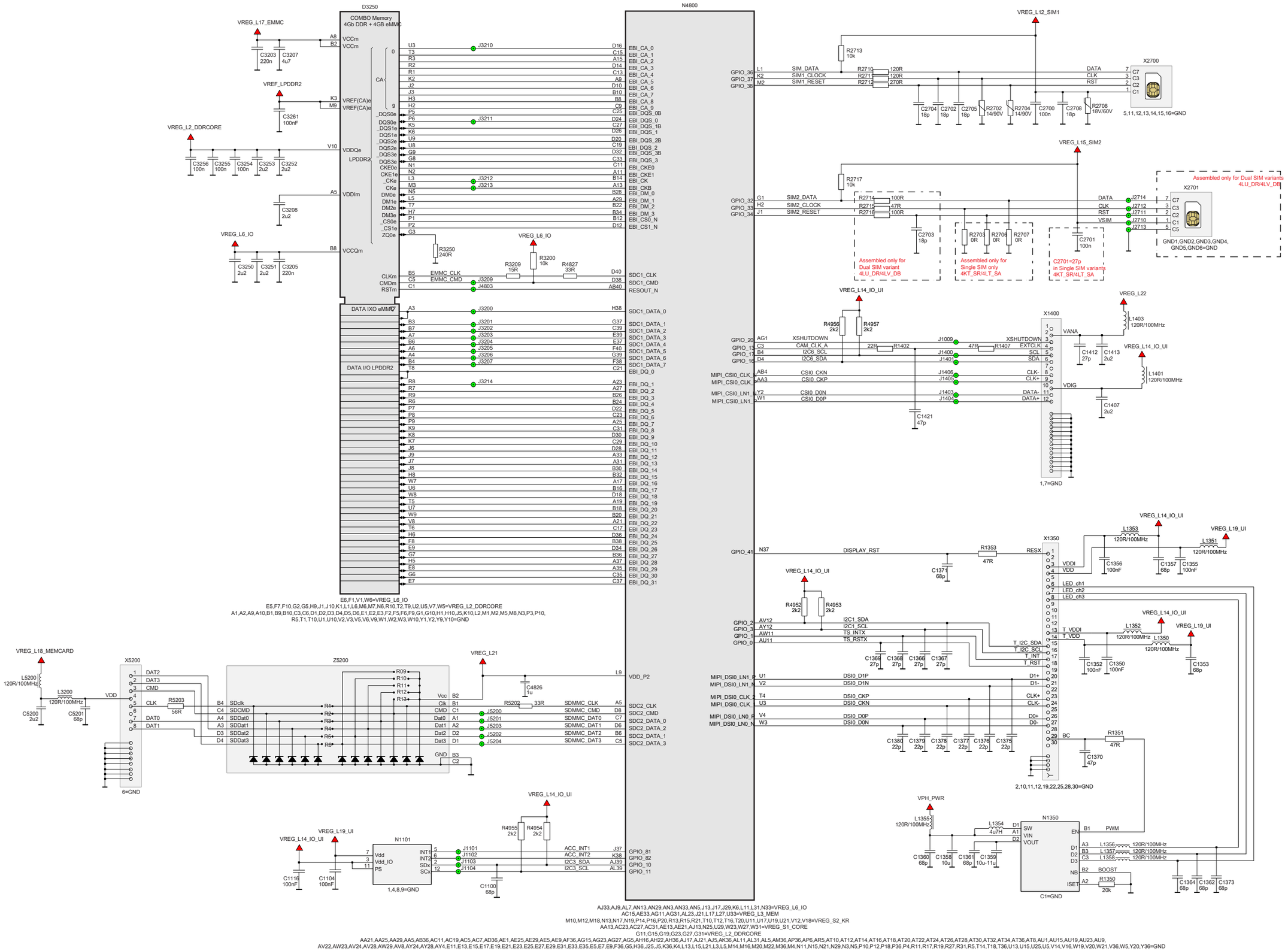

Nokia Lumia 530 RM-1017&1018 / Nokia Lumia 530 Dual SIM RM-1019&1020

Board: 4XX_XX | v1.0 | 25.07.2014 | Upknowledge

Microsoft Internal Use only | Copyright © 2014 Microsoft, Only for training and service purposes

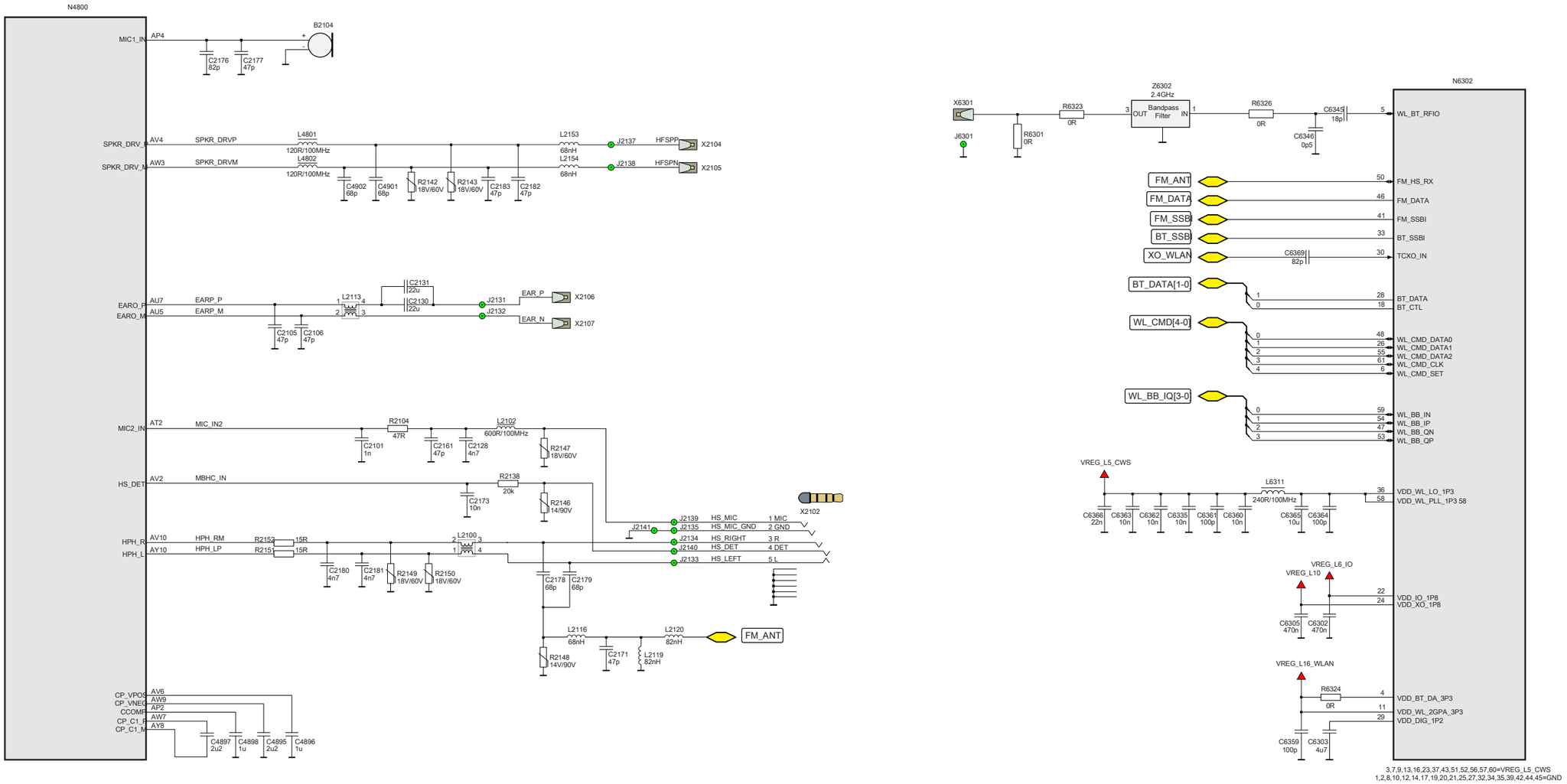

Nokia Lumia 530 RM-1017&1018 / Nokia Lumia 530 Dual SIM RM-1019&1020
Board: 4XX_XX | v1.0 | 25.07.2014 | Upknowledge

Microsoft Internal Use only | Copyright © 2014 Microsoft, Only for training and service purposes

Nokia Lumia 530 RM-1017&1018 / Nokia Lumia 530 Dual SIM RM-1019&1020 | Board: 4XX_XX | v1.0 | 25.07.2014 | Upknowle
Microsoft Internal Use only | Copyright © 2014 Microsoft, Only for training and service purposes

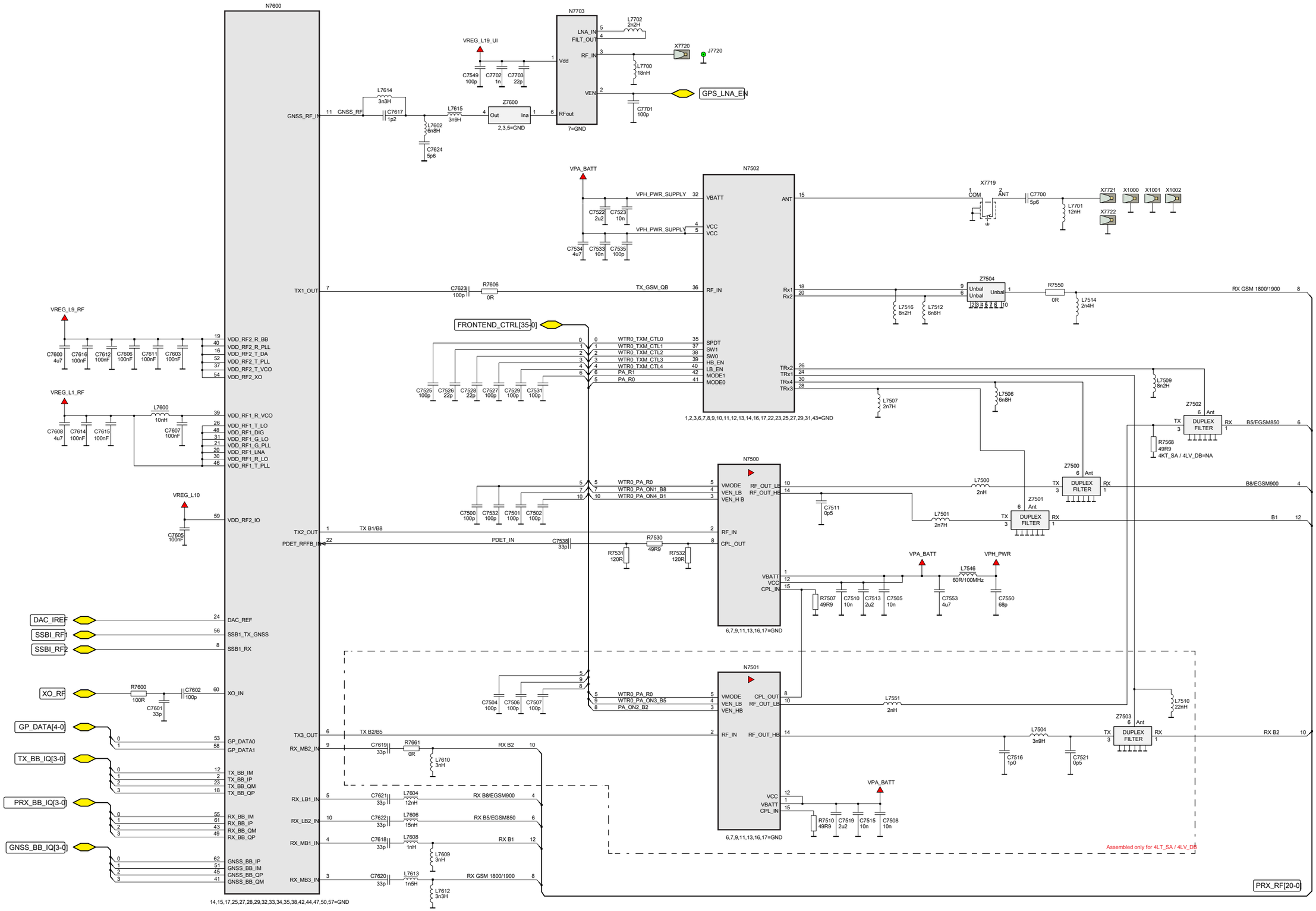

Microsoft Internal Use only | Copyright © 2014 Microsoft, Only for training and service purposes Microsoft

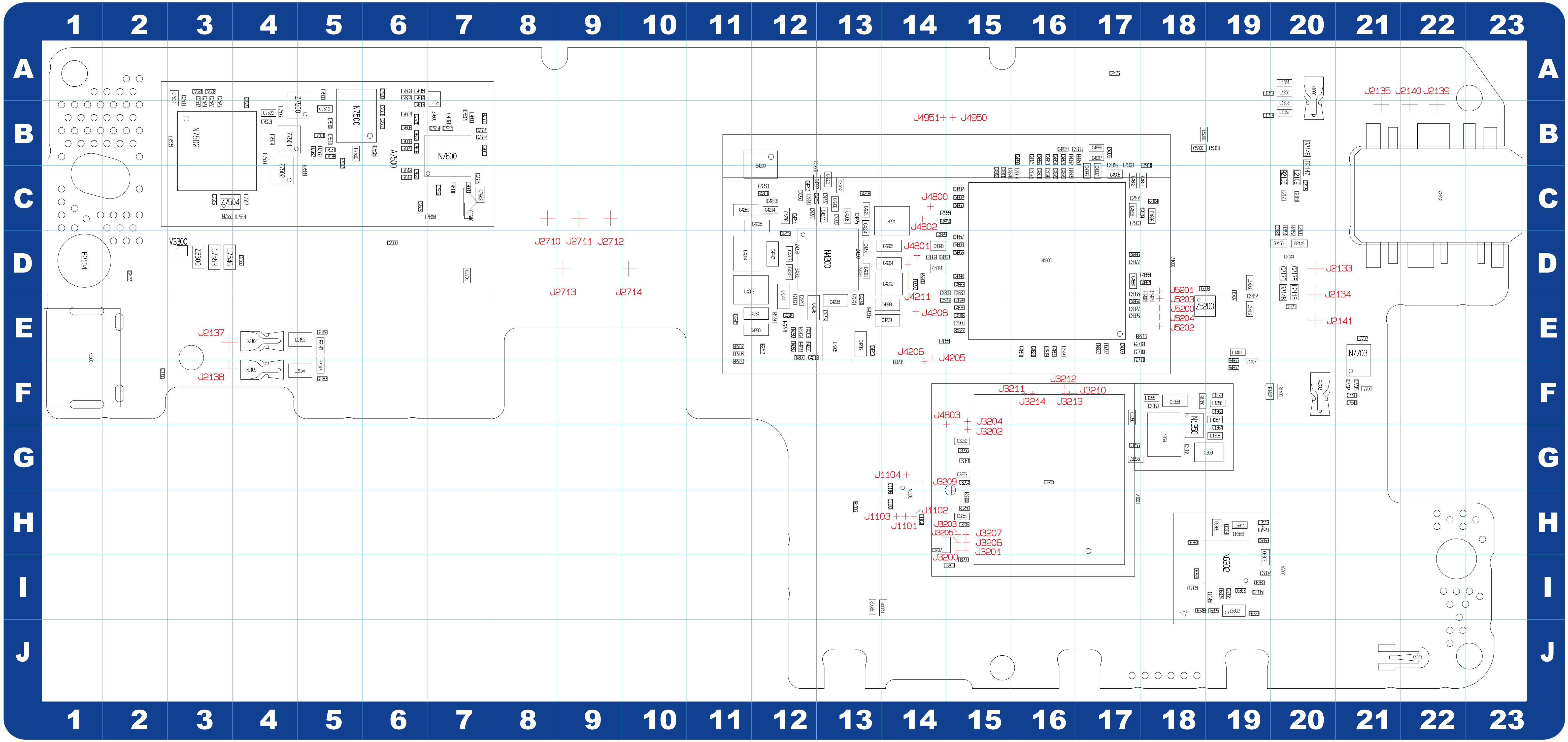

B		C1413	E19	C3203	I15	C4205	D14	C4225	C13
B2104	D1	C1421	E18	C3205	H15	C4206	C13	C4227	C13
B4200	B12	C2000	D6	C3207	H15	C4207	C13	C4233	E14
C		C2002	E12	C3208	G17	C4208	C13	C4234	E12
C1100	H14	C2101	C17	C3250	F17	C4209	C13	C4235	C12
C1104	H14	C2128	C20	C3251	H15	C4210	E13	C4236	E13
C1116	G14	C2161	C20	C3252	G15	C4211	C12	C4238	E13
C1353	A19	C2171	E20	C3253	G15	C4213	C12	C4242	E13
C1357	B19	C2173	C20	C3254	G15	C4214	C12	C4243	E12
C1358	F18	C2176	A17	C3255	G15	C4215	C13	C4244	E12
C1359	G19	C2177	D2	C3256	G17	C4216	E12	C4245	E11
C1360	F18	C2178	D20	C3261	G15	C4217	C12	C4246	E12
C1361	G18	C2179	D20	C3300	F2	C4219	D12	C4247	D12
C1362	F19	C2180	D20	C4200	D13	C4220	C12	C4249	E12
C1364	G19	C2181	D20	C4201	D13	C4221	C13	C4250	C12
C1373	F19	C2182	E5	C4202	D12	C4222	C13	C4252	C12
C1407	F19	C2183	F5	C4203	D12	C4223	C13	C4257	E13
C1412	E19	C2701	D7	C4204	D14	C4224	C13	C4258	C13

C4270	C12	C4850	C15	C4879	C16	C4900	E15	C5200	B18
C4271	C12	C4851	E16	C4880	D17	C4901	C18	C5201	B19
C4274	E13	C4855	E14	C4882	C15	C4902	B17	C6302	I19
C4277	C13	C4856	D15	C4883	D15	C4903	C17	C6303	I19
C4278	C12	C4857	D15	C4885	D18	C4904	C18	C6305	I18
C4279	E14	C4861	B16	C4886	D17	C4906	B17	C6335	I19
C4280	E12	C4862	D14	C4887	D18	C4907	B17	C6345	I19
C4281	C11	C4863	D14	C4888	B16	C4908	C17	C6346	I18
C4801	C16	C4864	E17	C4889	D14	C4909	E17	C6359	I18
C4802	C15	C4865	D17	C4890	D14	C4911	C15	C6360	H18
C4821	E16	C4866	B16	C4891	D14	C4912	C15	C6361	I19
C4826	E17	C4867	C16	C4892	D14	C4913	B16	C6362	I19
C4827	E17	C4871	B16	C4894	D15	C4914	B16	C6363	I19
C4828	E15	C4873	B16	C4895	C17	C4916	B17	C6364	H19
C4832	D15	C4874	C16	C4896	B17	C4917	E14	C6365	H19
C4833	B17	C4875	C16	C4897	C17	C4918	E15	C6366	H19
C4835	E15	C4876	C16	C4898	C17	C4919	E16	C6369	H19
C4846	C15	C4877	D17	C4899	E16	C4920	E16	C7500	A6

C7501	B6	C7538	B5	C7618	B6	L1356	F19	L4802	C17
C7502	B6	C7549	F21	C7620	C6	L1357	F19	L5200	B18
C7505	B6	C7550	D4	C7621	B6	L1358	G19	L6311	H19
C7510	B5	C7553	D3	C7622	B6	L1401	E19	L7500	A5
C7511	B5	C7600	C7	C7623	C6	L1403	D19	L7501	B5
C7513	B5	C7601	B7	C7624	A6	L2100	D20	L7506	B4
C7522	B4	C7602	B7	C7701	F21	L2102	C20	L7507	B4
C7523	B4	C7603	B7	C7702	F21	L2116	D20	L7509	B4
C7525	B4	C7605	C7	C7703	F21	L2119	H19	L7512	C4
C7526	B3	C7606	C7	**D**		L2120	H19	L7514	C4
C7527	B3	C7607	B7	D3250	G16	L2153	E5	L7516	C3
C7528	A3	C7608	C7	**L**		L2154	F5	L7546	D3
C7529	B3	C7611	C7	L1350	A20	L4201	C14	L7600	B7
C7531	A3	C7612	B7	L1351	A20	L4202	D14	L7602	A6
C7532	B3	C7614	B7	L1352	B20	L4203	D11	L7604	B6
C7533	B3	C7615	B7	L1353	B20	L4204	D11	L7606	B6
C7534	A3	C7616	C7	L1354	G18	L4205	E13	L7608	B6
C7535	B3	C7617	B6	L1355	F18	L4801	C18	L7609	B6

L7612	C6	R1350	F18	R2703	F11	R4290	E12	R6324	I19
L7613	C6	R1402	E18	R2706	E11	R4297	E12	R6326	I19
L7614	A6	R1405	F20	R2707	E11	R4300	E12	R7507	B5
L7615	A6	R1406	F19	R2710	E17	R4305	E13	R7530	B5
L7700	F21	R1407	E19	R2711	E17	R4802	E17	R7531	B5
L7702	E21	R2000	I14	R2712	E17	R4803	D15	R7532	B5
N		R2002	I13	R2713	E18	R4805	C16	R7550	C3
N1101	H14	R2104	C18	R2717	E12	R4827	E15	R7568	C5
N1350	G18	R2138	C20	R3200	H15	R4828	C18	R7569	B5
N4200	D13	R2142	F5	R3209	I15	R4952	B16	R7600	B7
N4800	D16	R2143	E5	R3250	H15	R4953	B17	R7606	C7
N6302	I19	R2146	B20	R4201	C12	R4954	C14	R9200	D14
N7500	B5	R2147	C20	R4202	E12	R4955	C14	R9201	F14
N7502	B3	R2148	D20	R4203	E12	R4956	F19	R9202	D14
N7600	B7	R2149	D20	R4251	E12	R4957	F19	**V**	
N7703	F21	R2150	D20	R4285	E12	R5202	E17	V3300	D3
R		R2151	D20	R4288	E12	R5203	D18	**X**	
R1006	H13	R2152	D20	R4289	E12	R6323	I19	X1000	A20

X1001	J22	Z7502	C4	J2712	C9	J4206	F14	J4961	H18
X1002	F20	Z7504	C3	J2713	D9	J4208	E14	J5200	E18
X2102	C22	Z7600	A7	J2714	D10	J4211	D14	J5201	D18
X2104	E4	**TST point**		J3200	H15	J4800	C14	J5202	E18
X2105	F4	J1101	H14	J3201	H15	J4801	D14	J5203	E18
X3300	E1	J1102	H14	J3202	G15	J4802	C14	J5204	E18
Z		J1103	H14	J3203	H15	J4803	F15		
Z3300	D3	J1104	G14	J3204	F15	J4950	B15		
Z4200	D13	J2133	D20	J3205	H15	J4951	B14		
Z4201	D13	J2134	D20	J3206	H15	J4952	H19		
Z4202	D12	J2135	B21	J3207	H15	J4953	H19		
Z4203	D12	J2137	E3	J3209	H15	J4954	I18		
Z4205	C12	J2138	F3	J3210	F16	J4955	I18		
Z4206	C12	J2139	B22	J3211	F16	J4956	I18		
Z5200	E18	J2140	B22	J3212	F16	J4957	H18		
Z6302	I19	J2141	E20	J3213	F16	J4958	H18		
Z7500	B5	J2710	C8	J3214	F16	J4959	H18		
Z7501	B4	J2711	C9	J4205	E14	J4960	H18		

Microsoft Internal Use only | Copyright © 2014 Microsoft, Only for training and service purposes

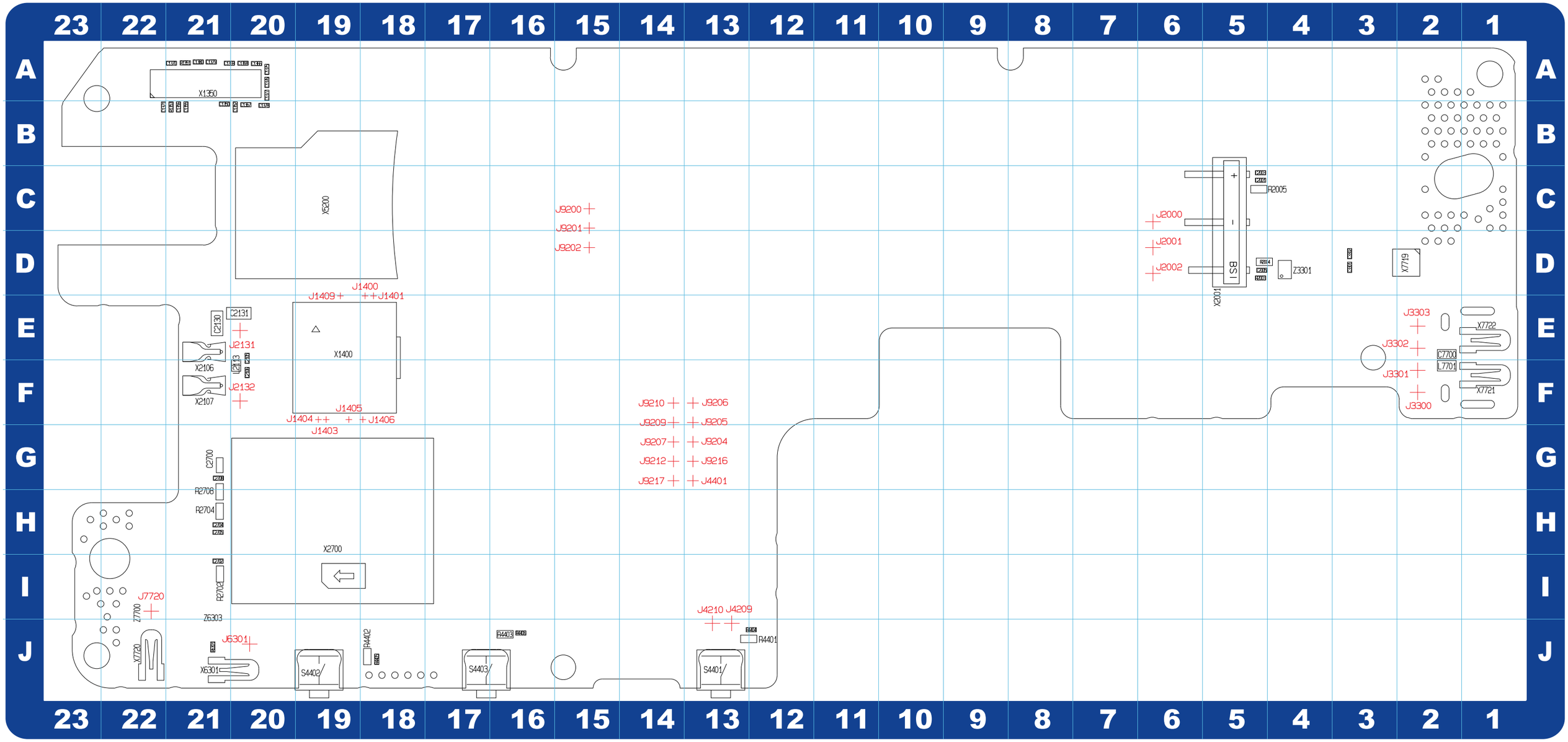

C	C2003	C5	R1351	A21	S4403	J17	Z7700	I22	J4207	D13
C1350	B21	C2005	D5	R1353	B21	X	TST poin		4209	J13
C1352	B20	C2105	E20	R2003	D5	X1350	A21	J1400	E18	J4210	J13
C1355	B21	C2106	F20	R2004	D5	X1400	E19	J1401	E18	J4401	G13
C1356	B21	C2130	E21	R2005	C5	X2001	C5	J1403	F19	J6301	J20
C1366	A20	C2131	E20	R2702	I21	X2106	E21	J1404	F19	J7720	I22
C1367	B20	C2700	G21	R2704	H21	X2107	F21	J1405	F19	J9200	C15
C1368	A20	C2702	I21	R2708	H21	X2700	H19	J1406	F18	J9201	C15
C1369	A21	C2704	H21	R4401	J13	X5200	C19	J1409	E19	J9202	D15
C1370	A21	C2705	H21	R4402	J18	X6301	J20	J2000	C6	J9204	G13
C1371	B22	C2708	G21	R4403	J16	X7719	D2	J2001	D6	J9205	F13
C1375	A20	C3301	D3	R4404	J12	X7720	J22	J2002	D6	J9206	F13
C1376	A20	C3302	D3	R4405	J18	X7721	F1	J2131	E20	J9207	G14
C1377	A20	C7700	E2	R4406	J16	X7722	E1	J2132	F20	J9209	F14
C1378	B20	L		R6301	J21	Z		J3300	F2	J9210	F14
C1379	A21	L2113	F20	S		Z3301	D4	J3301	F2	J9212	G14
C1380	A21	L7701	F2	S4401	J13	Z4204	C6	J3302	E2	J9216	G13
C2001	C5	R		S4402	J19	Z6303	J21	J3303	E2	J9217	G14

Microsoft Internal Use only | Copyright © 2014 Microsoft, Only for training and service purposes

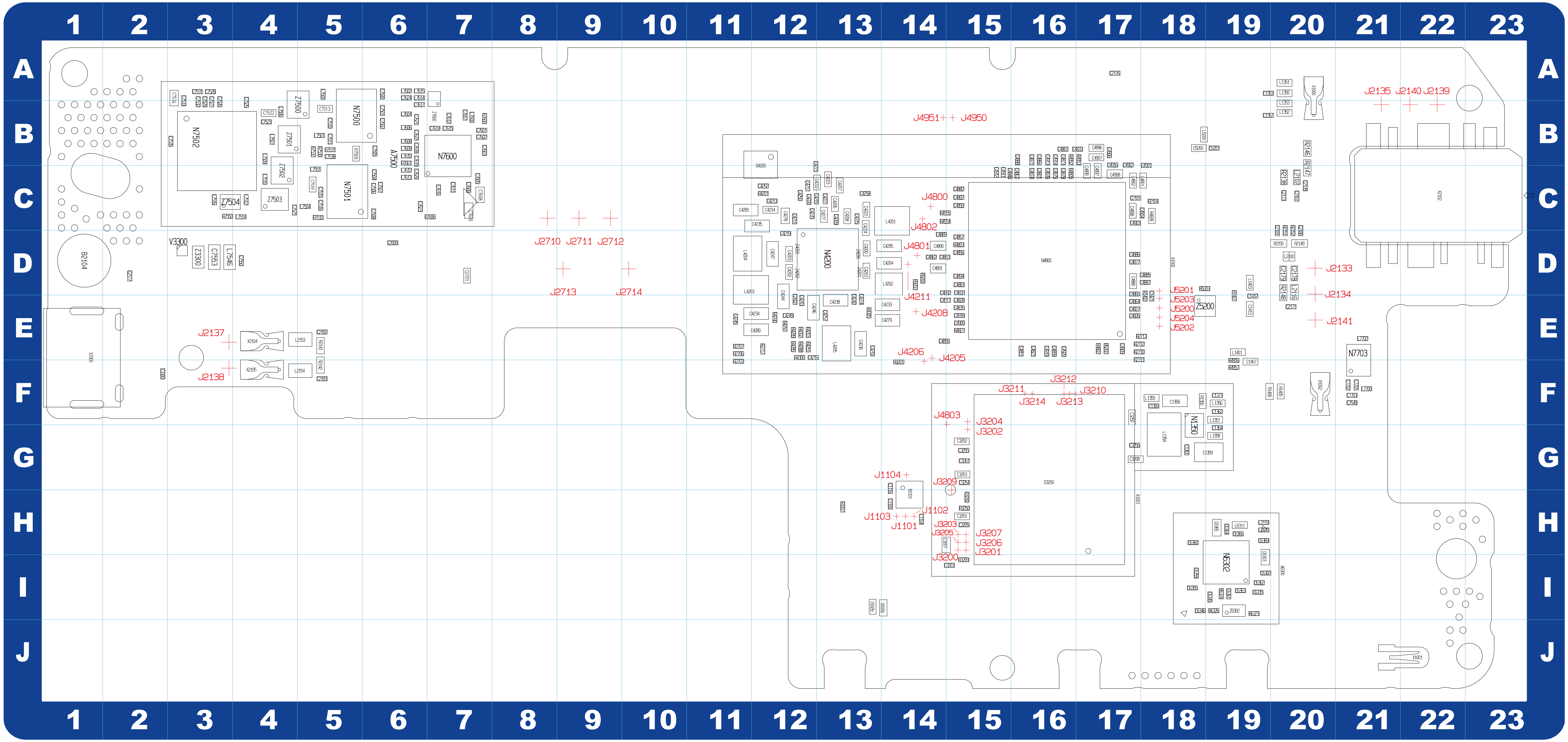

B		C1413	E19	C3203	I15	C4205	D14	C4225	C13	C4270	C12	C4850	C15
B2104	D1	C1421	E18	C3205	H15	C4206	C13	C4227	C13	C4271	C12	C4851	E16
B4200	B12	C2000	D6	C3207	H15	C4207	C13	C4233	E14	C4274	E13	C4855	E14
C		C2002	E12	C3208	G17	C4208	C13	C4234	E12	C4277	C13	C4856	D15
C1100	H14	C2101	C17	C3250	F17	C4209	C13	C4235	C12	C4278	C12	C4857	D15
C1104	H14	C2128	C20	C3251	H15	C4210	E13	C4236	E13	C4279	E14	C4861	B16
C1116	G14	C2161	C20	C3252	G15	C4211	C12	C4238	E13	C4280	E12	C4862	D14
C1353	A19	C2171	E20	C3253	G15	C4213	C12	C4242	E13	C4281	C11	C4863	D14
C1357	B19	C2173	C20	C3254	G15	C4214	C12	C4243	E12	C4801	C16	C4864	E17
C1358	F18	C2176	A17	C3255	G15	C4215	C13	C4244	E12	C4802	C15	C4865	D17
C1359	G19	C2177	D2	C3256	G17	C4216	E12	C4245	E11	C4821	E16	C4866	B16
C1360	F18	C2178	D20	C3261	G15	C4217	C12	C4246	E12	C4826	E17	C4867	C16
C1361	G18	C2179	D20	C3300	F2	C4219	D12	C4247	D12	C4827	E17	C4871	B16
C1362	F19	C2180	D20	C4200	D13	C4220	C12	C4249	E12	C4828	E15	C4873	B16
C1364	G19	C2181	D20	C4201	D13	C4221	C13	C4250	C12	C4832	D15	C4874	C16
C1373	F19	C2182	E5	C4202	D12	C4222	C13	C4252	C12	C4833	B17	C4875	C16
C1407	F19	C2183	F5	C4203	D12	C4223	C13	C4257	E13	C4835	E15	C4876	C16
C1412	E19	C2701	D7	C4204	D14	C4224	C13	C4258	C13	C4846	C15	C4877	D17

C4879	C16	C4900	E15	C5200	B18	C7501	B6	C7527	B3	C7607	B7
C4880	D17	C4901	C18	C5201	B19	C7502	B6	C7528	A3	C7608	C7
C4882	C15	C4902	B17	C6302	I19	C7504	C6	C7529	B3	C7611	C7
C4883	D15	C4903	C17	C6303	I19	C7505	B6	C7531	A3	C7612	B7
C4885	D18	C4904	C18	C6305	I18	C7506	C6	C7532	B3	C7614	B7
C4886	D17	C4906	B17	C6335	I19	C7507	C6	C7533	B3	C7615	B7
C4887	D18	C4907	B17	C6345	I19	C7508	C6	C7534	A3	C7616	C7
C4888	B16	C4908	C17	C6346	I18	C7510	B5	C7535	B3	C7617	B6
C4889	D14	C4909	E17	C6359	I18	C7511	B5	C7538	B5	C7618	B6
C4890	D14	C4911	C15	C6360	H18	C7513	B5	C7549	F21	C7619	B6
C4891	D14	C4912	C15	C6361	I19	C7515	C5	C7550	D4	C7620	C6
C4892	D14	C4913	B16	C6362	I19	C7516	C5	C7553	D3	C7621	B6
C4894	D15	C4914	B16	C6363	I19	C7519	C5	C7600	C7	C7622	B6
C4895	C17	C4916	B17	C6364	H19	C7521	C4	C7601	B7	C7623	C6
C4896	B17	C4917	E14	C6365	H19	C7522	B4	C7602	B7	C7624	A6
C4897	C17	C4918	E15	C6366	H19	C7523	B4	C7603	B7	C7701	F21
C4898	C17	C4919	E16	C6369	H19	C7525	B4	C7605	C7	C7702	F21
C4899	E16	C4920	E16	C7500	A6	C7526	B3	C7606	C7	C7703	F21

D		L2120	H19	L7510	C4	L7702	E21	R1407	E19	R2711	E17
D3250	G16	L2153	E5	L7512	C4	**N**		R2000	I14	R2712	E17
L		L2154	F5	L7514	C4	N1101	H14	R2002	I13	R2713	E18
L1350	A20	L4201	C14	L7516	C3	N1350	G18	R2104	C18	R2717	E12
L1351	A20	L4202	D14	L7546	D3	N4200	D13	R2138	C20	R3200	H15
L1352	B20	L4203	D11	L7551	C5	N4800	D16	R2142	F5	R3209	I15
L1353	B20	L4204	D11	L7600	B7	N6302	I19	R2143	E5	R3250	H15
L1354	G18	L4205	E13	L7602	A6	N7500	B5	R2146	B20	R4201	C12
L1355	F18	L4801	C18	L7604	B6	N7501	C5	R2147	C20	R4202	E12
L1356	F19	L4802	C17	L7606	B6	N7502	B3	R2148	D20	R4203	E12
L1357	F19	L5200	B18	L7608	B6	N7600	B7	R2149	D20	R4251	E12
L1358	G19	L6311	H19	L7609	B6	N7703	F21	R2150	D20	R4285	E12
L1401	E19	L7500	A5	L7610	B6	**R**		R2151	D20	R4288	E12
L1403	D19	L7501	B5	L7612	C6	R1007	H13	R2152	D20	R4289	E12
L2100	D20	L7504	C5	L7613	C6	R1350	F18	R2703	F11	R4290	E12
L2102	C20	L7506	B4	L7614	A6	R1402	E18	R2706	E11	R4297	E12
L2116	D20	L7507	B4	L7615	A6	R1405	F20	R2707	E11	R4300	E12
L2119	H19	L7509	B4	L7700	F21	R1406	F19	R2710	E17	R4305	E13

R4802	E17	R7531	B5	X2105	F4	**TST points**		J3200	H15	J4800	C14	J5202	E18
R4803	D15	R7532	B5	X3300	E1	J1101	H14	J3201	H15	J4801	D14	J5203	E18
R4805	C16	R7550	C3	**Z**		J1102	H14	J3202	G15	J4802	C14	J5204	E18
R4827	E15	R7569	B5	Z3300	D3	J1103	H14	J3203	H15	J4803	F15		
R4828	C18	R7600	B7	Z4200	D13	J1104	G14	J3204	F15	J4950	B15		
R4952	B16	R7606	C7	Z4201	D13	J2133	D20	J3205	H15	J4951	B14		
R4953	B17	R7661	B6	Z4202	D12	J2134	D20	J3206	H15	J4952	H19		
R4954	C14	R9200	D14	Z4203	D12	J2135	B21	J3207	H15	J4953	H19		
R4955	C14	R9201	F14	Z4205	C12	J2137	E3	J3209	H15	J4954	I18		
R4956	F19	R9202	D14	Z4206	C12	J2138	F3	J3210	F16	J4955	I18		
R4957	F19	**V**		Z5200	E18	J2139	B22	J3211	F16	J4956	I18		
R5202	E17	V3300	D3	Z6302	I19	J2140	B22	J3212	F16	J4957	H18		
R5203	D18	**X**		Z7500	B5	J2141	E20	J3213	F16	J4958	H18		
R6323	I19	X1000	A20	Z7501	B4	J2710	C8	J3214	F16	J4959	H18		
R6324	I19	X1001	J22	Z7502	C4	J2711	C9	J4205	E14	J4960	H18		
R6326	I19	X1002	F20	Z7503	C4	J2712	C9	J4206	F14	J4961	H18		
R7510	C5	X2102	C22	Z7504	C3	J2713	D9	J4208	E14	J5200	E18		
R7530	B5	X2104	E4	Z7600	A7	J2714	D10	J4211	D14	J5201	D18		

Microsoft Internal Use only | Copyright © 2014 Microsoft, Only for training and service purposes

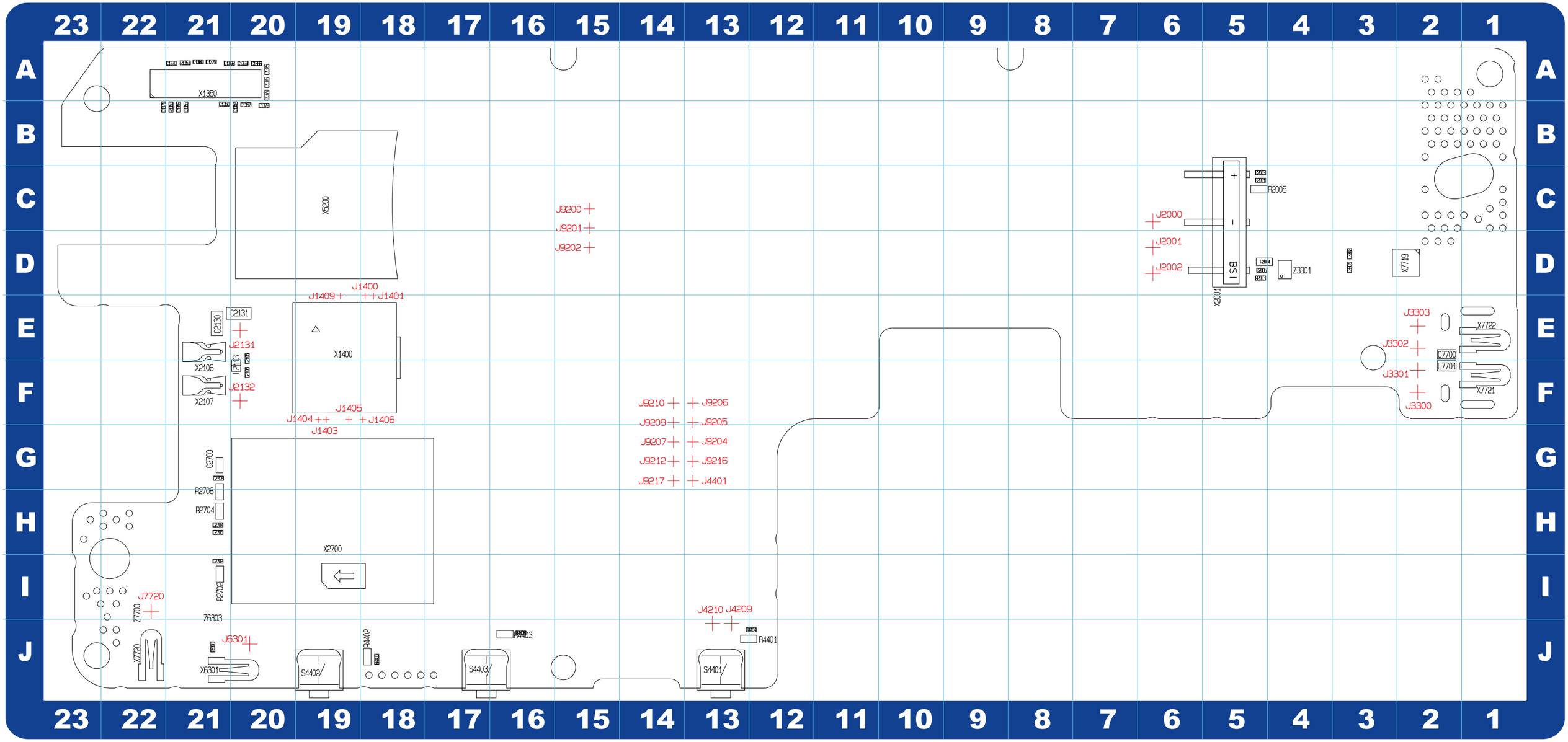

C	C2003	C5	R1351	A21	S4403	J17	Z7700	I22	J4207	D13
C1350	B21	C2005	D5	R1353	B21	X	TST poin		4209	J13
C1352	B20	C2105	E20	R2003	D5	X1350	A21	J1400	E18	J4210	J13
C1355	B21	C2106	F20	R2004	D5	X1400	E19	J1401	E18	J4401	G13
C1356	B21	C2130	E21	R2005	C5	X2001	C5	J1403	F19	J6301	J20
C1366	A20	C2131	E20	R2702	I21	X2106	E21	J1404	F19	J7720	I22
C1367	B20	C2700	G21	R2704	H21	X2107	F21	J1405	F19	J9200	C15
C1368	A20	C2702	I21	R2708	H21	X2700	H19	J1406	F18	J9201	C15
C1369	A21	C2704	H21	R4401	J13	X5200	C19	J1409	E19	J9202	D15
C1370	A21	C2705	H21	R4402	J18	X6301	J20	J2000	C6	J9204	G13
C1371	B22	C2708	G21	R4403	J16	X7719	D2	J2001	D6	J9205	F13
C1375	A20	C3301	D3	R4404	J12	X7720	J22	J2002	D6	J9206	F13
C1376	A20	C3302	D3	R4405	J18	X7721	F1	J2131	E20	J9207	G14
C1377	A20	C7700	E2	R4406	J16	X7722	E1	J2132	F20	J9209	F14
C1378	B20	L	R6301	J21	Z	J3300	F2	J9210	F14
C1379	A21	L2113	F20	S	Z3301	D4	J3301	F2	J9212	G14
C1380	A21	L7701	F2	S4401	J13	Z4204	C6	J3302	E2	J9216	G13
C2001	C5	R	S4402	J19	Z6303	J21	J3303	E2	J9217	G14

Microsoft Internal Use only | Copyright © 2014 Microsoft, Only for training and service purposes Microsoft

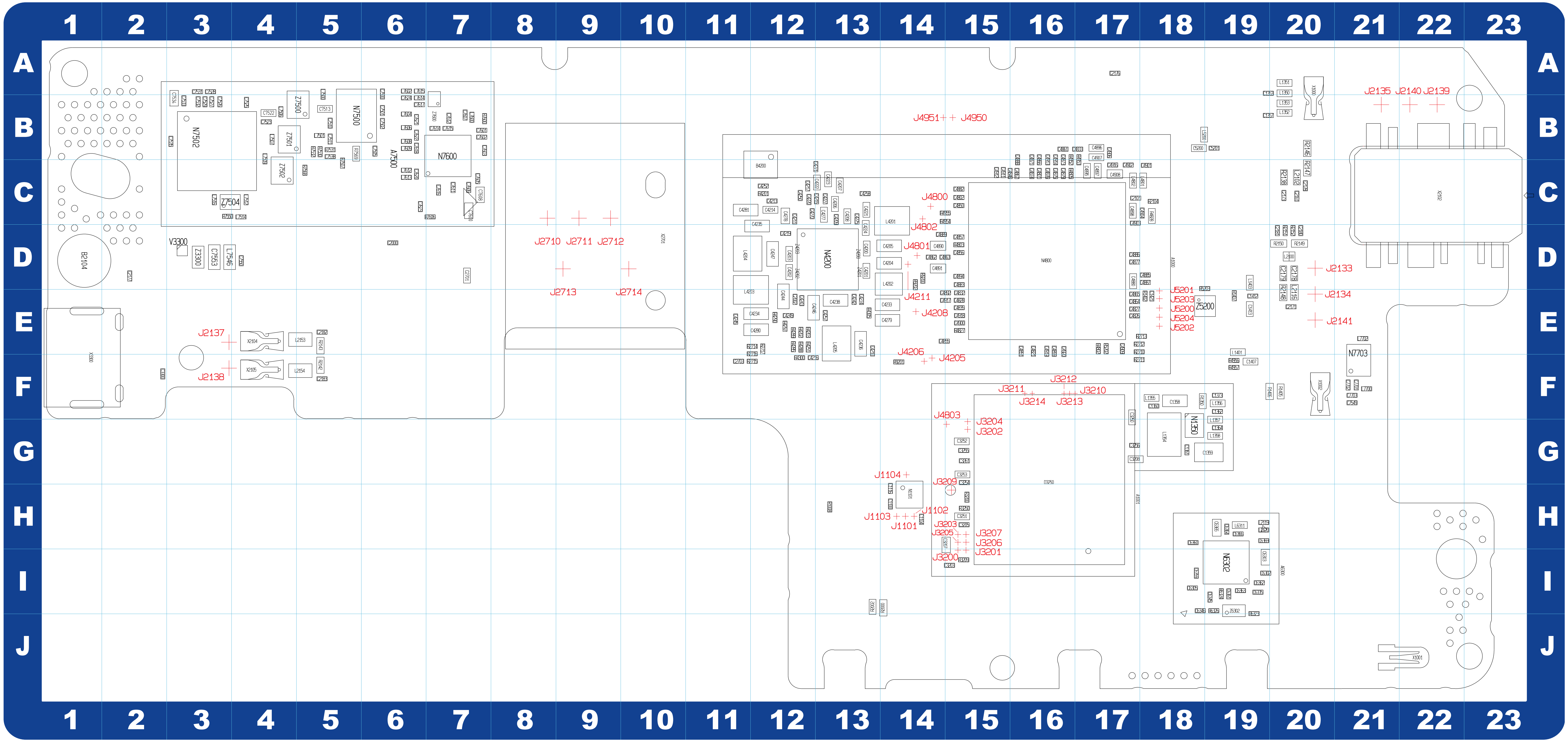

B		C1413	E19	C2703	F11	C4204	D14	C4224	D13	C4258	C13	C4846	C15	C4877	D17	C4899	E16	C4920	E16	C7500	A6	C7535	B3	C7617	B6	L1355	F18	L4801	C18	L7609	B6	R1008	H13	R2152	D20	R4289	E12	R6323	I19	X1000	B20	Z7500	B5	J2710	C8	J3214	F16	J4959	H18
B2104	D1	C1421	E18	C3203	I15	C4205	D14	C4225	C13	C4270	C12	C4850	C15	C4879	C16	C4900	E15	C5200	B18	C7501	B6	C7538	B5	C7618	B6	L1356	F19	L4802	C17	L7612	C6	R1350	F18	R2710	E17	R4290	E12	R6324	I19	X1001	J22	Z7501	B4	J2711	C9	J4205	E14	J4960	H18
B4200	C12	C2000	D6	C3205	H15	C4206	C13	C4227	C13	C4271	C13	C4851	E16	C4880	D17	C4901	C18	C5201	B19	C7502	B6	C7549	F21	C7620	C6	L1357	G19	L5200	B18	L7613	C6	R1402	E18	R2711	F17	R4297	E12	R6326	I19	X1002	F20	Z7502	C4	J2712	C9	J4206	F14	J4961	H18
C		C2002	E12	C3207	H15	C4207	C13	C4233	E14	C4274	E13	C4855	E14	C4882	C15	C4902	C17	C6302	I19	C7505	B6	C7550	D4	C7621	B6	L1358	G19	L6311	H19	L7614	B6	R1405	F20	R2712	E17	R4300	F12	R7507	C5	X2102	C22	Z7504	C3	J2713	D9	J4208	E14	J5200	E18
C1100	H14	C2101	C17	C3208	G17	C4208	C13	C4234	E12	C4277	C13	C4856	D15	C4883	D15	C4903	C17	C6303	I19	C7510	B5	C7553	D3	C7622	B6	L1401	E19	L7500	A5	L7615	A6	R1406	F19	R2713	E18	R4305	E13	R7530	B5	X2104	E4	Z7600	B7	J2714	D10	J4211	D14	J5201	D18
C1104	H14	C2128	C20	C3250	F17	C4209	C13	C4235	D12	C4278	C12	C4857	D15	C4885	D18	C4904	C18	C6305	I18	C7511	B5	C7600	C7	C7623	C6	L1403	D19	L7501	B5	L7700	F21	R1407	E19	R2714	E12	R4802	E17	R7531	B5	X2105	F4	**TST points**		J3200	H15	J4800	C14	J5202	E18
C1116	H14	C2161	C20	C3251	H15	C4210	E13	C4236	E13	C4279	E14	C4861	B16	C4886	D17	C4906	B17	C6335	I19	C7513	B5	C7601	B7	C7624	B6	L2100	D20	L7506	B4	L7702	E21	R2000	I14	R2715	F12	R4803	D15	R7532	B5	X2701	D9	J1101	H14	J3201	H15	J4801	D14	J5203	E18
C1353	A19	C2171	E20	C3252	G15	C4211	C12	C4238	E13	C4280	E12	C4862	D14	C4887	D18	C4907	B17	C6345	I19	C7522	B4	C7602	B7	C7701	F21	L2102	C20	L7507	B4	**N**		R2002	I13	R2716	E12	R4805	C16	R7550	C3	X3300	F1	J1102	H14	J3202	G15	J4802	C14	J5204	E18
C1357	B19	C2173	C20	C3253	G15	C4213	C12	C4242	E13	C4281	C11	C4863	D14	C4888	C16	C4908	C17	C6346	I18	C7523	B4	C7603	B7	C7702	F21	L2116	E20	L7509	B4	N1101	H14	R2104	C18	R2717	E12	R4827	E15	R7568	C5	**Z**		J1103	H14	J3203	H15	J4803	F15		
C1358	F18	C2176	A17	C3254	G15	C4214	C12	C4243	E12	C4801	C16	C4864	E17	C4889	D14	C4909	E17	C6359	I18	C7525	B4	C7605	C7	C7703	F21	L2119	H19	L7512	C4	N1350	G18	R2138	C20	R3200	H15	R4828	C18	R7569	B5	Z3300	D3	J1104	G14	J3204	F15	J4950	B15		
C1359	G19	C2177	D2	C3255	G15	C4215	C13	C4244	E12	C4802	C15	C4865	E17	C4890	D14	C4911	C15	C6360	H18	C7526	B3	C7606	C7	**D**		L2120	H19	L7514	C4	N4200	D13	R2142	F5	R3209	I15	R4952	C16	R7600	B7	Z4200	D13	J2133	D20	J3205	H15	J4951	B14		
C1360	F18	C2178	D20	C3256	G17	C4216	F12	C4245	E11	C4821	E16	C4866	C16	C4891	D14	C4912	C15	C6361	I19	C7527	B3	C7607	B7	D3250	G16	L2153	E5	L7516	C3	N4800	D16	R2143	E5	R3250	H15	R4953	C17	R7606	C7	Z4201	D13	J2134	D20	J3206	H15	J4952	H19		
C1361	G18	C2179	D20	C3261	G15	C4217	C12	C4246	E12	C4826	E17	C4867	C16	C4892	E15	C4913	C16	C6362	I19	C7528	A3	C7608	C7	**L**		L2154	F5	L7546	D3	N6302	I19	R2146	B20	R4201	C12	R4954	C14	R9200	D14	Z4202	D12	J2135	B21	J3207	H15	J4953	H19		
C1362	F19	C2180	D20	C3300	F2	C4219	D12	C4247	D12	C4827	E17	C4871	C16	C4894	D15	C4914	C16	C6363	I19	C7529	B3	C7611	C7	L1350	A20	L4201	C14	L7600	B7	N7500	B5	R2147	C20	R4202	E12	R4955	C14	R9201	F14	Z4203	D12	J2137	E3	J3209	H15	J4954	I18		
C1364	G19	C2181	D20	C4200	D13	C4220	C12	C4249	E12	C4828	E15	C4873	C16	C4895	C17	C4916	C17	C6364	H19	C7531	A3	C7612	B7	L1351	A20	L4202	D14	L7602	A6	N7502	B3	R2148	E20	R4203	E12	R4956	F19	R9202	D14	Z4205	C12	J2138	F3	J3210	F16	J4955	I18		
C1373	F19	C2182	E5	C4201	D13	C4221	C13	C4250	C12	C4832	E15	C4874	C16	C4896	B17	C4917	E15	C6365	H19	C7532	B3	C7614	B7	L1352	B20	L4203	E12	L7604	B6	N7600	B7	R2149	D20	R4251	E12	R4957	F19	**V**		Z4206	C12	J2139	B22	J3211	F16	J4956	I18		
C1407	F19	C2183	F5	C4202	D12	C4222	C13	C4252	C12	C4833	B17	C4875	C16	C4897	C17	C4918	E15	C6366	H19	C7533	B3	C7615	B7	L1353	B20	L4204	D11	L7606	B6	N7703	F21	R2150	D20	R4285	E12	R5202	E17	V3300	D3	Z5200	E19	J2140	B22	J3212	F16	J4957	H18		
C1412	E19	C2701	D7	C4203	D12	C4223	C13	C4257	E13	C4835	E15	C4876	C16	C4898	C17	C4919	E16	C6369	H19	C7534	B3	C7616	C7	L1354	G18	L4205	E13	L7608	B6	**R**		R2151	D20	R4288	E12	R5203	D18	**X**		Z6302	I19	J2141	E20	J3213	F16	J4958	H18		

Microsoft Internal Use only | Copyright © 2014 Microsoft, Only for training and service purposes

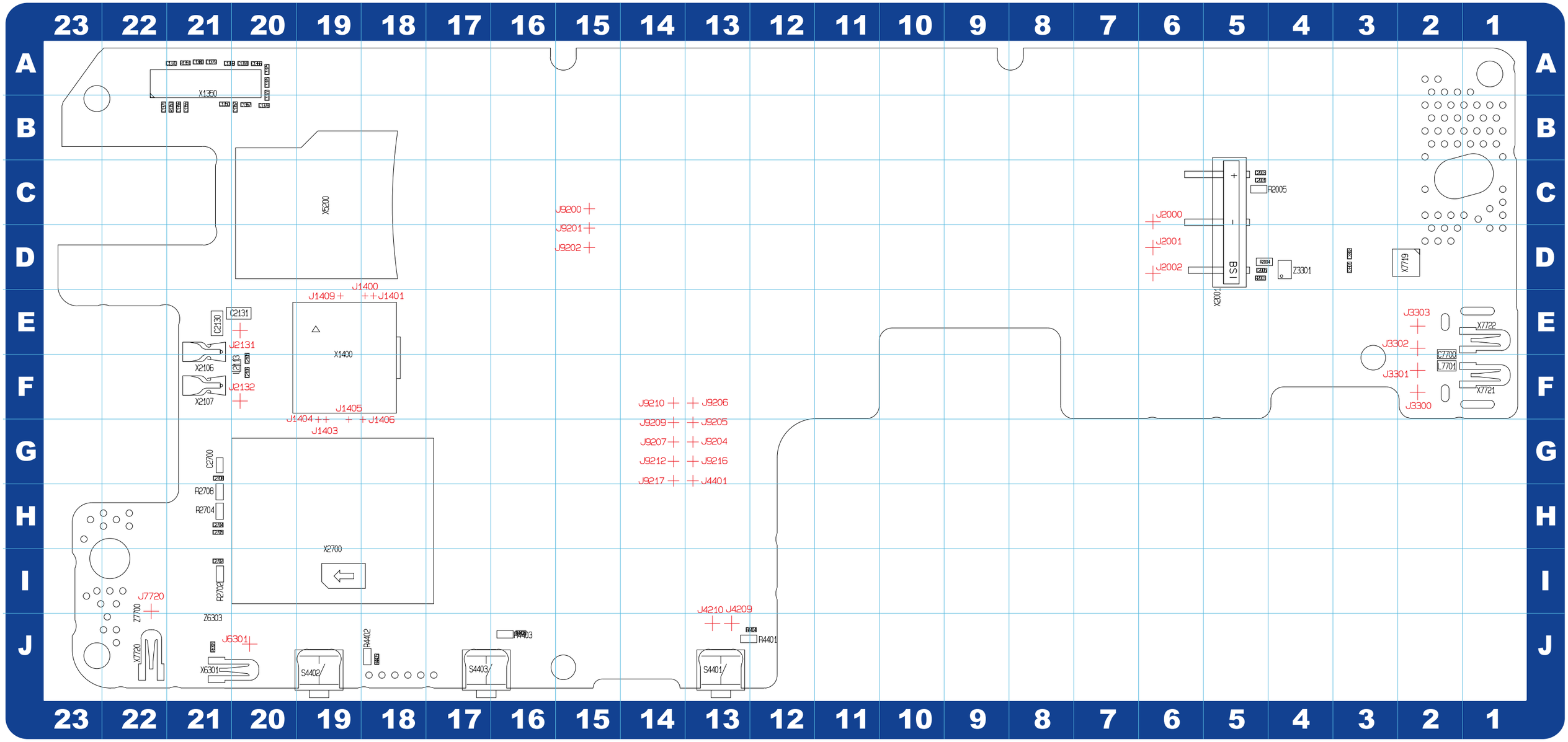

C		C2003	C5	R1351	A21	S4403	J17	Z7700	I22	J4207	D13
C1350	B21	C2005	D5	R1353	B21	X		TST point		J4209	J13
C1352	B20	C2105	F20	R2003	D5	X1350	A21	J1400	E18	J4210	J13
C1355	B21	C2106	F20	R2004	D5	X1400	F19	J1401	E18	J4401	G13
C1356	B21	C2130	E21	R2005	C5	X2001	C5	J1403	F19	J6301	J20
C1366	A20	C2131	E20	R2702	I21	X2106	E21	J1404	F19	J7720	I22
C1367	B20	C2700	G21	R2704	H21	X2107	F21	J1405	F19	J9200	C15
C1368	A20	C2702	I21	R2708	H21	X2700	H19	J1406	F18	J9201	C15
C1369	A21	C2704	H21	R4401	J13	X5200	C19	J1409	E19	J9202	D15
C1370	A21	C2705	H21	R4402	J18	X6301	J20	J2000	C6	J9204	G13
C1371	B22	C2708	G21	R4403	J16	X7719	D2	J2001	D6	J9205	F13
C1375	A20	C3301	D3	R4404	J12	X7720	J22	J2002	D6	J9206	F13
C1376	A20	C3302	D3	R4405	J18	X7721	F1	J2131	E20	J9207	G14
C1377	B20	C7700	E2	R4406	J16	X7722	E1	J2132	F20	J9209	F14
C1378	B20	L		R6301	J21	Z		J3300	F2	J9210	F14
C1379	A21	L2113	F20	S		Z3301	D4	J3301	F2	J9212	G14
C1380	A21	L7701	F2	S4401	J13	Z4204	C6	J3302	E2	J9216	G13
C2001	C5	R		S4402	J19	Z6303	J21	J3303	E2	J9217	G14

Microsoft Internal Use only | Copyright © 2014 Microsoft, Only for training and service purposes

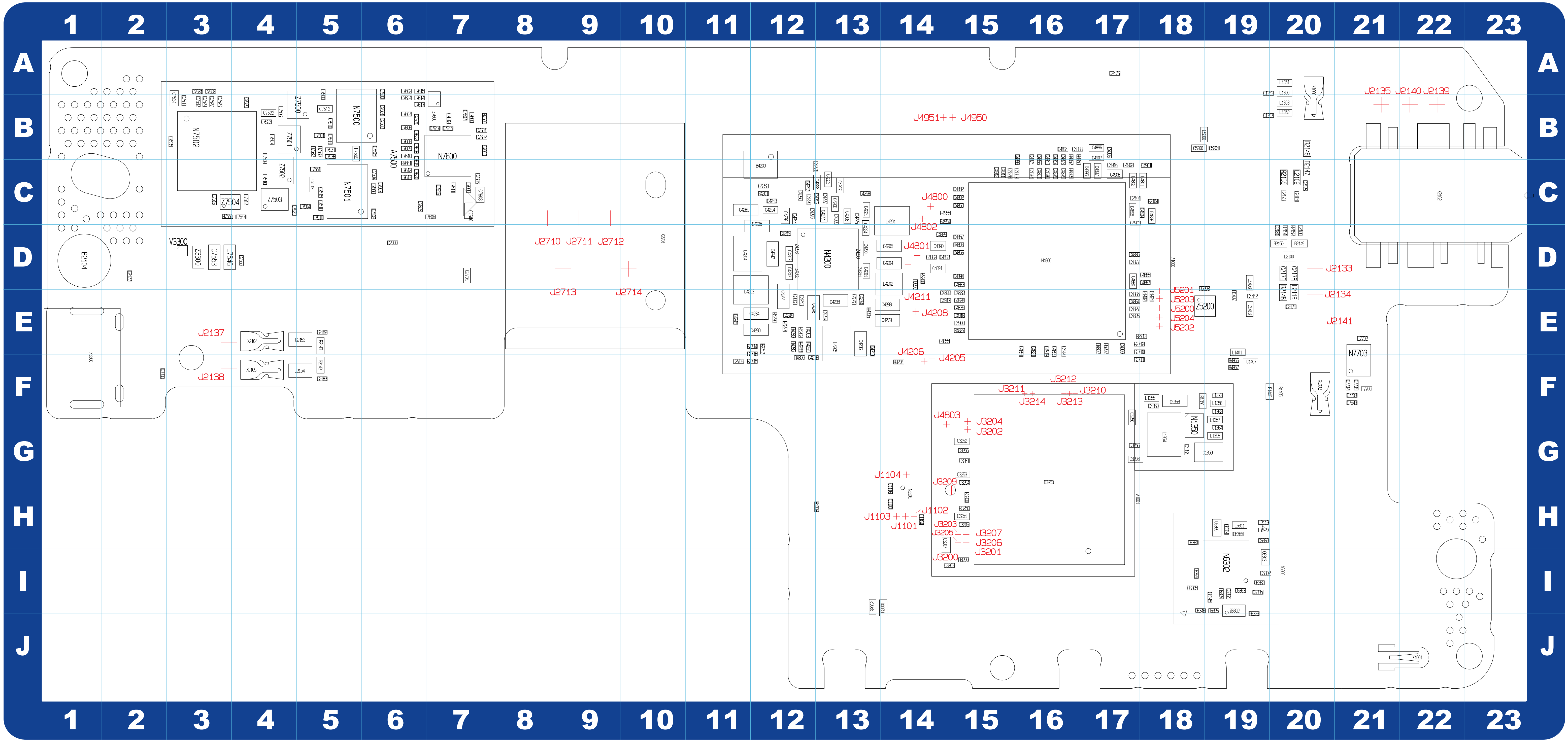

B		C1413	E19	C2703	F11	C4204	D14	C4224	D13	C4258	C13	C4846	C15	C4877	D17	C4899	E16
B2104	D1	C1421	E18	C3203	I15	C4205	D14	C4225	C13	C4270	C12	C4850	C15	C4879	C16	C4900	E15
B4200	C12	C2000	D6	C3205	H15	C4206	C13	C4227	C13	C4271	C13	C4851	E16	C4880	D17	C4901	C18
C		C2002	E12	C3207	H15	C4207	C13	C4233	E14	C4274	E13	C4855	E14	C4882	C15	C4902	C17
C1100	H14	C2101	C17	C3208	G17	C4208	C13	C4234	E12	C4277	C13	C4856	D15	C4883	D15	C4903	C17
C1104	H14	C2128	C20	C3250	F17	C4209	C13	C4235	D12	C4278	C12	C4857	D15	C4885	D18	C4904	C18
C1116	H14	C2161	C20	C3251	H15	C4210	E13	C4236	E13	C4279	E14	C4861	B16	C4886	D17	C4906	B17
C1353	A19	C2171	E20	C3252	G15	C4211	C12	C4238	E13	C4280	E12	C4862	D14	C4887	D18	C4907	B17
C1357	B19	C2173	C20	C3253	G15	C4213	C12	C4242	E13	C4281	C11	C4863	D14	C4888	C16	C4908	C17
C1358	F18	C2176	A17	C3254	G15	C4214	C12	C4243	E12	C4801	C16	C4864	E17	C4889	D14	C4909	E17
C1359	G19	C2177	D2	C3255	G15	C4215	C13	C4244	E12	C4802	C15	C4865	E17	C4890	D14	C4911	C15
C1360	F18	C2178	D20	C3256	G17	C4216	F12	C4245	E11	C4821	E16	C4866	C16	C4891	D14	C4912	C15
C1361	G18	C2179	D20	C3261	G15	C4217	C12	C4246	E12	C4826	E17	C4867	C16	C4892	E15	C4913	C16
C1362	F19	C2180	D20	C3300	F2	C4219	D12	C4247	D12	C4827	E17	C4871	C16	C4894	D15	C4914	C16
C1364	G19	C2181	D20	C4200	D13	C4220	C12	C4249	E12	C4828	E15	C4873	C16	C4895	C17	C4916	C17
C1373	F19	C2182	E5	C4201	D13	C4221	C13	C4250	C12	C4832	E15	C4874	C16	C4896	B17	C4917	E15
C1407	F19	C2183	F5	C4202	D12	C4222	C13	C4252	C12	C4833	B17	C4875	C16	C4897	C17	C4918	E15
C1412	E19	C2701	D7	C4203	D12	C4223	C13	C4257	E13	C4835	E15	C4876	C16	C4898	C17	C4919	E16

C4920	E16	C7500	A6	C7526	B3	C7606	C7	C7703	F21	L2119	H19	L7509	B4	L7700	F21	R1406	F19
C5200	B18	C7501	B6	C7527	B3	C7607	B7	**D**		L2120	H19	L7510	C4	L7702	E21	R1407	E19
C5201	B19	C7502	B6	C7528	A3	C7608	C7	D3250	G16	L2153	E5	L7512	C4	**N**		R2000	I14
C6302	I19	C7504	C6	C7529	B3	C7611	C7	**L**		L2154	F5	L7514	C4	N1101	H14	R2002	I13
C6303	I19	C7505	B6	C7531	A3	C7612	B7	L1350	A20	L4201	C14	L7516	C3	N1350	G18	R2104	C18
C6305	I18	C7506	C6	C7532	B3	C7614	B7	L1351	A20	L4202	D14	L7546	D3	N4200	D13	R2138	C20
C6335	I19	C7507	C6	C7533	B3	C7615	B7	L1352	B20	L4203	E12	L7551	C5	N4800	D16	R2142	F5
C6345	I19	C7508	C6	C7534	B3	C7616	C7	L1353	B20	L4204	D11	L7600	B7	N6302	I19	R2143	E5
C6346	I18	C7510	B5	C7535	B3	C7617	B6	L1354	G18	L4205	E13	L7602	A6	N7500	B5	R2146	B20
C6359	I18	C7511	B5	C7538	B5	C7618	B6	L1355	F18	L4801	C18	L7604	B6	N7501	C5	R2147	C20
C6360	H18	C7513	B5	C7549	F21	C7619	C6	L1356	F19	L4802	C17	L7606	B6	N7502	B3	R2148	E20
C6361	I19	C7515	C5	C7550	D4	C7620	C6	L1357	G19	L5200	B18	L7608	B6	N7600	B7	R2149	D20
C6362	I19	C7516	C5	C7553	D3	C7621	B6	L1358	G19	L6311	H19	L7609	B6	N7703	F21	R2150	D20
C6363	I19	C7519	C5	C7600	C7	C7622	B6	L1401	E19	L7500	A5	L7610	B6	**R**		R2151	D20
C6364	H19	C7521	C4	C7601	B7	C7623	C6	L1403	D19	L7501	B5	L7612	C6	R1009	H13	R2152	D20
C6365	H19	C7522	B4	C7602	B7	C7624	B6	L2100	D20	L7504	C5	L7613	C6	R1350	F18	R2710	E17
C6366	H19	C7523	B4	C7603	B7	C7701	F21	L2102	C20	L7506	B4	L7614	B6	R1402	E18	R2711	F17
C6369	H19	C7525	B4	C7605	C7	C7702	F21	L2116	E20	L7507	B4	L7615	A6	R1405	F20	R2712	E17

R2713	E18	R4305	E13	R7530	B5	X2104	E4	Z7504	C3	J2713	D9	J4208	E14	J5200	E18
R2714	E12	R4802	E17	R7531	B5	X2105	F4	Z7600	B7	J2714	D10	J4211	D14	J5201	D18
R2715	F12	R4803	D15	R7532	B5	X2701	D9	**TST points**		J3200	H15	J4800	C14	J5202	E18
R2716	E12	R4805	C16	R7550	C3	X3300	F1	J1101	H14	J3201	H15	J4801	D14	J5203	E18
R2717	E12	R4827	E15	R7569	B5	**Z**		J1102	H14	J3202	G15	J4802	C14	J5204	E18
R3200	H15	R4828	C18	R7600	B7	Z3300	D3	J1103	H14	J3203	H15	J4803	F15		
R3209	I15	R4952	C16	R7606	C7	Z4200	D13	J1104	G14	J3204	F15	J4950	B15		
R3250	H15	R4953	C17	R7661	C6	Z4201	D13	J2133	D20	J3205	H15	J4951	B14		
R4201	C12	R4954	C14	R9200	D14	Z4202	D12	J2134	D20	J3206	H15	J4952	H19		
R4202	E12	R4955	C14	R9201	F14	Z4203	D12	J2135	B21	J3207	H15	J4953	H19		
R4203	E12	R4956	F19	R9202	D14	Z4205	C12	J2137	E3	J3209	H15	J4954	I18		
R4251	E12	R4957	F19	**V**		Z4206	C12	J2138	F3	J3210	F16	J4955	I18		
R4285	E12	R5202	E17	V3300	D3	Z5200	E19	J2139	B22	J3211	F16	J4956	I18		
R4288	E12	R5203	D18	**X**		Z6302	I19	J2140	B22	J3212	F16	J4957	H18		
R4289	E12	R6323	I19	X1000	B20	Z7500	B5	J2141	E20	J3213	F16	J4958	H18		
R4290	E12	R6324	I19	X1001	J22	Z7501	B4	J2710	C8	J3214	F16	J4959	H18		
R4297	E12	R6326	I19	X1002	F20	Z7502	C4	J2711	C9	J4205	E14	J4960	H18		
R4300	F12	R7510	C5	X2102	C22	Z7503	C4	J2712	C9	J4206	F14	J4961	H18		

Microsoft Internal Use only | Copyright © 2014 Microsoft, Only for training and service purposes

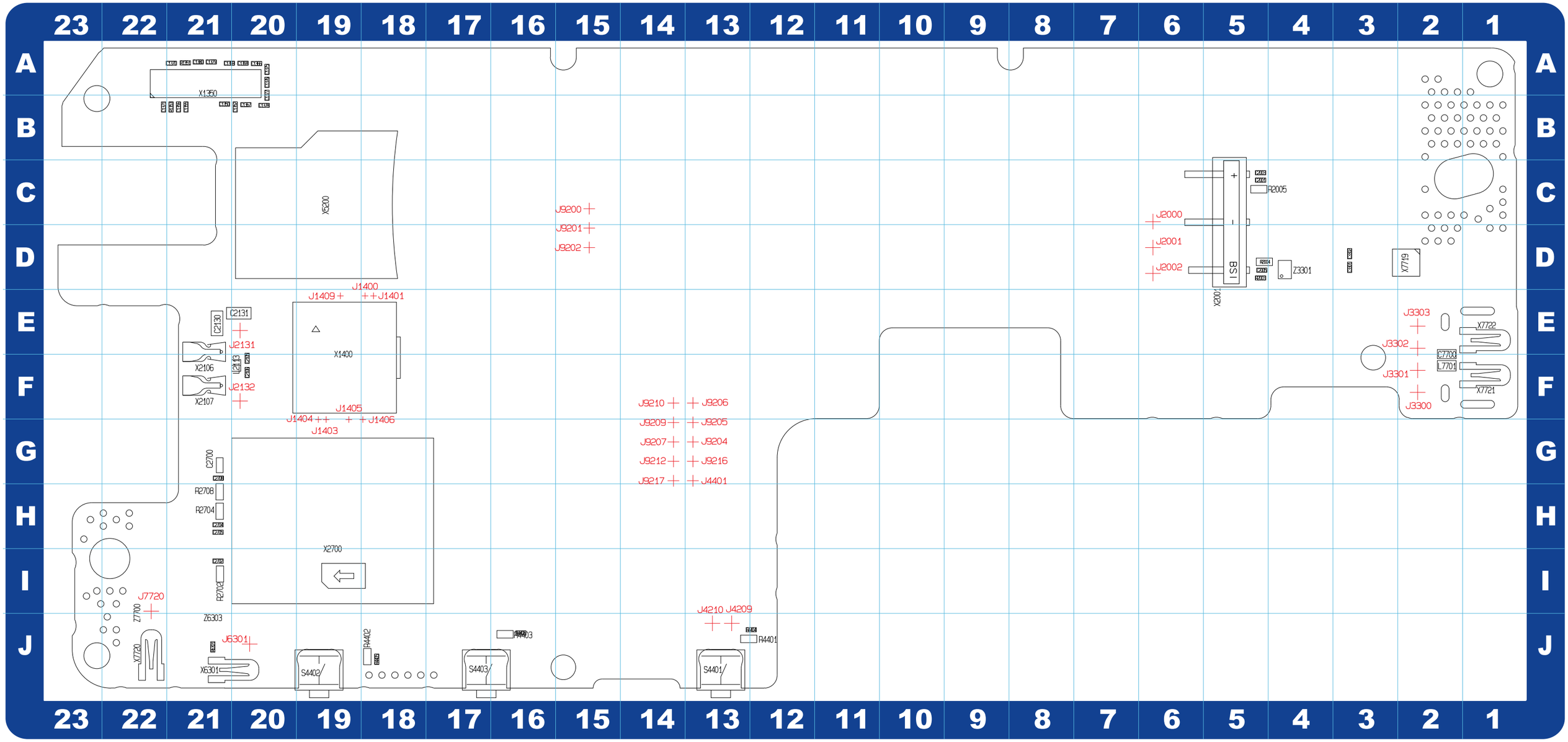

C		C2003	C5	R1351	A21	S4403	J17	Z7700	I22	J4207	D13
C1350	B21	C2005	D5	R1353	B21	X		TST point		J4209	J13
C1352	B20	C2105	F20	R2003	D5	X1350	A21	J1400	E18	J4210	J13
C1355	B21	C2106	F20	R2004	D5	X1400	F19	J1401	E18	J4401	G13
C1356	B21	C2130	E21	R2005	C5	X2001	C5	J1403	F19	J6301	J20
C1366	A20	C2131	E20	R2702	I21	X2106	E21	J1404	F19	J7720	I22
C1367	B20	C2700	G21	R2704	H21	X2107	F21	J1405	F19	J9200	C15
C1368	A20	C2702	I21	R2708	H21	X2700	H19	J1406	F18	J9201	C15
C1369	A21	C2704	H21	R4401	J13	X5200	C19	J1409	E19	J9202	D15
C1370	A21	C2705	H21	R4402	J18	X6301	J20	J2000	C6	J9204	G13
C1371	B22	C2708	G21	R4403	J16	X7719	D2	J2001	D6	J9205	F13
C1375	A20	C3301	D3	R4404	J12	X7720	J22	J2002	D6	J9206	F13
C1376	A20	C3302	D3	R4405	J18	X7721	F1	J2131	E20	J9207	G14
C1377	B20	C7700	E2	R4406	J16	X7722	E1	J2132	F20	J9209	F14
C1378	B20	L		R6301	J21	Z		J3300	F2	J9210	F14
C1379	A21	L2113	F20	S		Z3301	D4	J3301	F2	J9212	G14
C1380	A21	L7701	F2	S4401	J13	Z4204	C6	J3302	E2	J9216	G13
C2001	C5	R		S4402	J19	Z6303	J21	J3303	E2	J9217	G14

Microsoft Internal Use only | Copyright © 2014 Microsoft, Only for training and service purposes Microsoft